PRODUCT SPECIFICATION INFORMATION

PROJECT NAME

Floor Mounted Toilet

PROJECT LOCATION

DATE

2022/12/15

PREPARED BY

JF TAYLOR
Enterprises Ltd.

Head Office

WC-1 BF

CADET® PRO™

Toilet - Floor mounted with floor outlet

To be specified

Centoco - Seat

☒ **820STSFE-001** FAST-N-LOCK, For elongated bowl, Open front, Heavy duty, For commercial applications, Polypropylene, Toilet seat, With seat cover, Plastic commercial check hinges, and Stainless steel hinge pin, Specified in White finish,

FAST-N-LOCK mounting system takes the guess work out when tightening the hardware. The specially designed fasteners in click" when the appropriate torque is reached. The bolt and nut material shall be stainless steel,

Dimensions:25 mm (1") high, 470 mm (18-1/2") long, 362 mm (14-1/4") wide

McGuire - Supply

☒ **LFBV172** Lead free, 127 mm (5") length, Convertible quarter-turn supply , Chrome-plated finish, Two 13 mm (1/2") copper sweat x 10 mm (3/8") outer Ø brass ball valve, 304 mm (12") copper flexible risers, Convertible loose key handle, Toilet, 2 deep bell flange

American Standard- Toilet

☒ 215AA104.020

Tank type Toilet, Floor mounted with floor outlet, High Efficiency HET 4.8 LPF (1.28 GPF), White finish Vitreous china, EverClean® antimicrobial surface, Elongated bowl, Right Height® rim at 419 mm (16-1/2"), Minimum 305 mm (12") rough-in from wall to the center of waste outlet, Siphon jet flush action, Manual, Polished chrome left-hand trip lever (7381231-200.0020A), Tank not lined, Without tank cover locking device, Gravity-assisted flush, Cadet® flushing system, 76 mm (3") flush valve, metal shank fill valve, Tank coupling components, Fully-glazed 54 mm (2-1/8") trapway, PowerWash™ rim scrubs bowl with pressurized water every flush, Includes EZ-Install Tools, Trade exclusive tank, Toilet seat not included, Colour-matched bolt caps,
Consisting of: 3517A101 bowl, 4188A104 tank tank,
Overall Dimensions: 441 mm (17-3/8") wide, 765 mm (30-1/8") from finished wall, 772 mm (30-3/8") high
Water Surface: 229 x 203 mm (9" x 8") water surface area
Map Score: >=1000 MaP® flush score
Compliances: ASME A112.19.2 compliant, CSA B45.1 compliant, EPA WaterSense® compliant.

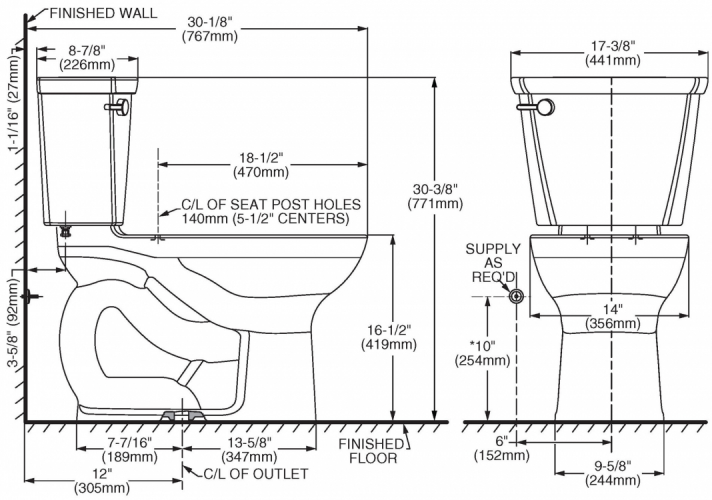

Note:

Spec Reference: 128672
Product Reference: 7037898; 7039790; 7017078

Estimated Total: **Not available**

WC-3

CADET® PRO™

Toilet - Floor mounted with floor outlet

To be specified

Centoco - Seat

☒ **1500STSCCFE-001** FAST-N-LOCK, For elongated bowl, Open front, Heavy duty, For commercial applications, Polypropylene, Toilet seat, Less seat cover, Plastic commercial check hinges, and Stainless steel hinge pin, Specified in White finish,

FAST-N-LOCK mounting system takes the guess work out when tightening the hardware. The specially designed fasteners in click" when the appropriate torque is reached. The bolt and nut material shall be stainless steel,

Dimensions:32 mm (1-1/4") high, 473 mm (18-5/8") long, 368 mm (14-1/2") wide

McGuire - Supply

☒ **LFBV172** Lead free, 127 mm (5") length, Convertible quarter-turn supply , Chrome-plated finish, Two 13 mm (1/2") copper sweat x 10 mm (3/8") outer Ø brass ball valve, 304 mm (12") copper flexible risers, Convertible loose key handle, Toilet, 2 deep bell flange

American Standard- Toilet

☒ 215CA164.020

Tank type Toilet, Floor mounted with floor outlet, High Efficiency HET 4.8 LPF (1.28 GPF), White finish Vitreous china, EverClean® antimicrobial surface, Elongated bowl, Minimum 305 mm (12") rough-in from wall to the center of waste outlet, Siphon jet flush action, Manual, Polished chrome left-hand trip lever (7381231-200.0020A), Tank not lined, With tank cover locking device, Gravity-assisted flush, Cadet® flushing system, 76 mm (3") flush valve, Tank coupling components, Fully-glazed 54 mm (2-1/8") trapway, PowerWash™ rim scrubs bowl with pressurized water every flush, Includes EZ-Install Tools, Trade exclusive tank, Toilet seat not included, Colour-matched bolt caps,
Consisting of: 3517C101 bowl, 4188A164 tank complete with tank cover locking device tank,
Overall Dimensions: 441 mm (17-3/8") wide, 765 mm (30-1/8") from finished wall, 733 mm (28-7/8") high
Water Surface: 229 x 203 mm (9" x 8") water surface area
Map Score: >=1000 MaP® flush score
Compliances: ASME A112.19.2 compliant, CSA B45.1 compliant, EPA WaterSense® compliant.

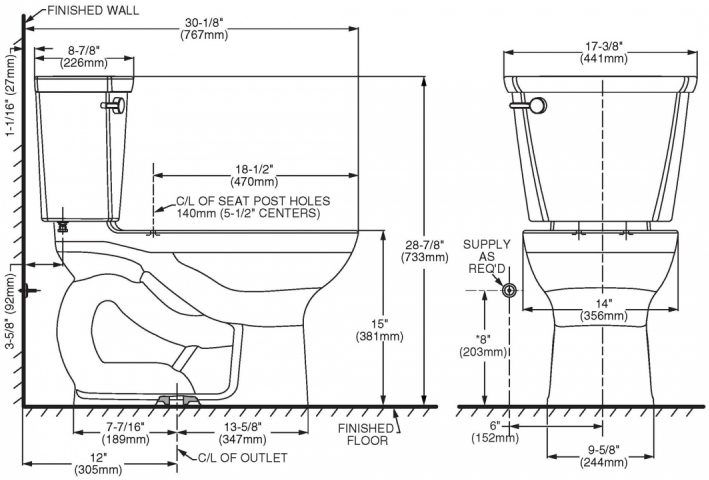

Note:

Spec Reference: 128672
Product Reference: 17247559; 7039971; 7017078

Estimated Total: **Not available**

WC-1

CADET® PRO™

Toilet - Floor mounted with floor outlet

To be specified

Centoco - Seat

☒ **1500STSCCFE-001** FAST-N-LOCK, For elongated bowl, Open front, Heavy duty, For commercial applications, Polypropylene, Toilet seat, Less seat cover, Plastic commercial check hinges, and Stainless steel hinge pin, Specified in White finish,

FAST-N-LOCK mounting system takes the guess work out when tightening the hardware. The specially designed fasteners in click" when the appropriate torque is reached. The bolt and nut material shall be stainless steel,

Dimensions:32 mm (1-1/4") high, 473 mm (18-5/8") long, 368 mm (14-1/2") wide

McGuire - Supply

☒ **LFBV172** Lead free, 127 mm (5") length, Convertible quarter-turn supply , Chrome-plated finish, Two 13 mm (1/2") copper sweat x 10 mm (3/8") outer Ø brass ball valve, 304 mm (12") copper flexible risers, Convertible loose key handle, Toilet, 2 deep bell flange

American Standard- Toilet

☒ 215CA104.020

Tank type Toilet, Floor mounted with floor outlet, High Efficiency HET 4.8 LPF (1.28 GPF), White finish Vitreous china, EverClean® antimicrobial surface, Elongated bowl, Minimum 305 mm (12") rough-in from wall to the center of waste outlet, Siphon jet flush action, Manual, Polished chrome left-hand trip lever (7381231-200.0020A), Tank not lined, Without tank cover locking device, Gravity-assisted flush, Cadet® flushing system, 76 mm (3") flush valve, Tank coupling components, Fully-glazed 54 mm (2-1/8") trapway, PowerWash™ rim scrubs bowl with pressurized water every flush, Includes EZ-Install Tools, Trade exclusive tank, Toilet seat not included, Colour-matched bolt caps,
Consisting of: 3517C101 bowl, 4188A104 tank tank,
Overall Dimensions: 441 mm (17-3/8") wide, 765 mm (30-1/8") from finished wall, 733 mm (28-7/8") high
Water Surface: 229 x 203 mm (9" x 8") water surface area
Map Score: >=1000 MaP® flush score
Compliances: ASME A112.19.2 compliant, CSA B45.1 compliant, EPA WaterSense® compliant.

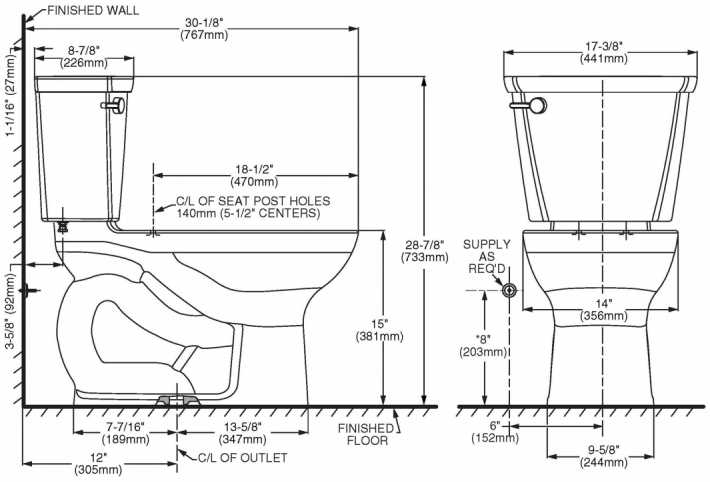

Note:

Spec Reference: 128672
Product Reference: 7015893; 7039971; 7017078

Estimated Total: **Not available**

WC-2 BF

CADET® PRO™

Toilet - Floor mounted with floor outlet

To be specified

Centoco - Seat

☒ **820STSFE-001** FAST-N-LOCK, For elongated bowl, Open front, Heavy duty, For commercial applications, Polypropylene, Toilet seat, With seat cover, Plastic commercial check hinges, and Stainless steel hinge pin, Specified in White finish,

FAST-N-LOCK mounting system takes the guess work out when tightening the hardware. The specially designed fasteners in click" when the appropriate torque is reached. The bolt and nut material shall be stainless steel,

Dimensions:25 mm (1") high, 470 mm (18-1/2") long, 362 mm (14-1/4") wide

McGuire - Supply

☒ **LFBV172** Lead free, 127 mm (5") length, Convertible quarter-turn supply , Chrome-plated finish, Two 13 mm (1/2") copper sweat x 10 mm (3/8") outer Ø brass ball valve, 304 mm (12") copper flexible risers, Convertible loose key handle, Toilet, 2 deep bell flange

American Standard- Toilet

☒ 215AA004.020

Tank type Toilet, Floor mounted with floor outlet, Low consumption 6.0 LPF (1.6 GPF), White finish Vitreous china, EverClean® antimicrobial surface, Elongated bowl, Right Height® rim at 419 mm (16-1/2"), Minimum 305 mm (12") rough-in from wall to the center of waste outlet, Siphon jet flush action, Manual, Polished chrome left-hand trip lever (7381231-200.0020A), Tank not lined, Without tank cover locking device, Gravity-assisted flush, Cadet® flushing system, 76 mm (3") flush valve, metal shank fill valve, Tank coupling components, Fully-glazed 54 mm (2-1/8") trapway, PowerWash™ rim scrubs bowl with pressurized water every flush, Includes EZ-Install Tools, Trade exclusive tank, Toilet seat not included, Colour-matched bolt caps,
Consisting of: 3517A101 bowl, 4188A004 tank tank,
Overall Dimensions: 441 mm (17-3/8") wide, 765 mm (30-1/8") from finished wall, 772 mm (30-3/8") high
Water Surface: 229 x 203 mm (9" x 8") water surface area
Map Score: >=1000 MaP® flush score
Compliances: ASME A112.19.2 compliant, CSA B45.1 compliant.

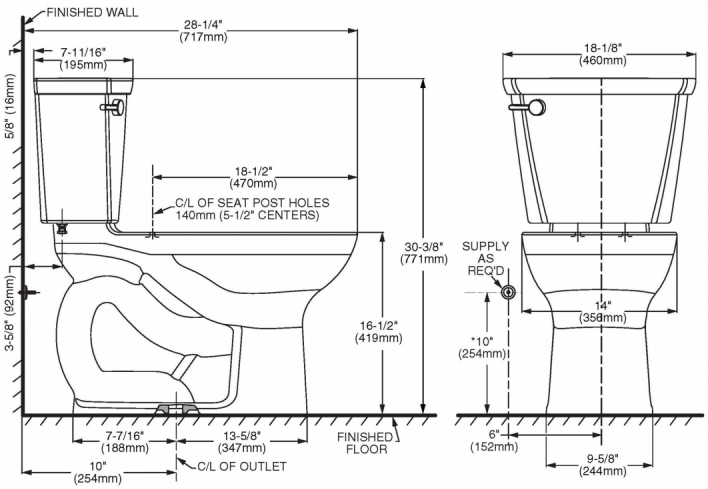

Note:

Spec Reference: 128672
Product Reference: 7009508; 7039790; 7017078

Estimated Total: **Not available**

WC-2

CADET® PRO™

Toilet - Floor mounted with floor outlet

To be specified

Centoco - Seat

☒ **1500STSCCFE-001** FAST-N-LOCK, For elongated bowl, Open front, Heavy duty, For commercial applications, Polypropylene, Toilet seat, Less seat cover, Plastic commercial check hinges, and Stainless steel hinge pin, Specified in White finish,

FAST-N-LOCK mounting system takes the guess work out when tightening the hardware. The specially designed fasteners in click" when the appropriate torque is reached. The bolt and nut material shall be stainless steel,

Dimensions:32 mm (1-1/4") high, 473 mm (18-5/8") long, 368 mm (14-1/2") wide

McGuire - Supply

☒ **LFBV172** Lead free, 127 mm (5") length, Convertible quarter-turn supply , Chrome-plated finish, Two 13 mm (1/2") copper sweat x 10 mm (3/8") outer Ø brass ball valve, 304 mm (12") copper flexible risers, Convertible loose key handle, Toilet, 2 deep bell flange

American Standard- Toilet

☒ 215CA004.020

Tank type Toilet, Floor mounted with floor outlet, Low consumption 6.0 LPF (1.6 GPF), White finish Vitreous china, EverClean® antimicrobial surface, Elongated bowl, Minimum 305 mm (12") rough-in from wall to the center of waste outlet, Siphon jet flush action, Manual, Polished chrome left-hand trip lever (7381231-200.0020A), Tank not lined, Without tank cover locking device, Gravity-assisted flush, Cadet® flushing system, 76 mm (3") flush valve, metal shank fill valve, Tank coupling components, Fully-glazed 54 mm (2-1/8") trapway, PowerWash™ rim scrubs bowl with pressurized water every flush, Includes EZ-Install Tools, Trade exclusive tank, Toilet seat not included, Colour-matched bolt caps,
Consisting of: 3517C101 bowl, 4188A004 tank tank,
Overall Dimensions: 441 mm (17-3/8") wide, 765 mm (30-1/8") from finished wall, 733 mm (28-7/8") high
Water Surface: 229 x 203 mm (9" x 8") water surface area
Map Score: >=1000 MaP® flush score
Compliances: ASME A112.19.2 compliant, CSA B45.1 compliant.

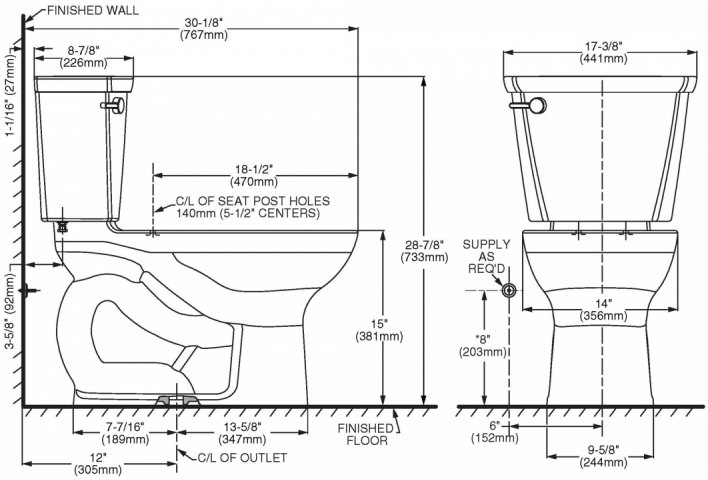

Note:

Spec Reference: 128672
Product Reference: 7009510; 7039971; 7017078

Estimated Total: **Not available**